BATTERY CELL HENEX

WALL

$$S_2 = \frac{PR}{t} = \frac{1500(2)}{.125} = 24{,}000 \text{ PSI}$$

$$S_1 = \frac{PR}{2t} = \frac{1500(2)}{2(.125)} = 12{,}000 \text{ PSI}$$

END .375 TK.

$$S_{MAX} = \frac{3W}{8\pi m t} \times (3m+1)$$

$$m = \frac{1}{V} \quad V =$$

$$W = 1500\pi(2)^2$$

$$W = 18{,}850$$

$$S_{MAX} = \frac{56549}{29}(26)$$

$$S_{MAX} = 50{,}699 \text{ PSI}$$

END .500 TK

$$S_{MAX} = \frac{56549}{52.36}(26) = 28{,}080 \text{ PSI}$$

$$Y_{MAX} = \frac{3W(m-1)(5m+1)(2)^2}{16\pi\, 28\times10^6 (8.33)^2 (.5)^3}$$

$$= \frac{56{,}549(2.33)(42.65)(4)}{16\pi\, 28\times10^6 (69.4)(.125)} = .00580$$

$$G = \frac{E}{2(1+V)}$$

$$12.5\times10^6 = \frac{28\times10^6}{2(1+V)}$$

$$12.5\times10^6 = \frac{14\times10^6}{(1+V)}$$

$$1+V = 1.12$$

$$V = .12$$

$$2(1+V)(12.5\times10^6) = 28\times10$$

$$2(1+V) = \frac{28\times10^6}{12.5\times10^6}$$

$$2(1+V) = 2.24$$

$$1+V = 1.12$$

$$V = .12$$

$$\frac{1}{V} = 8.333$$

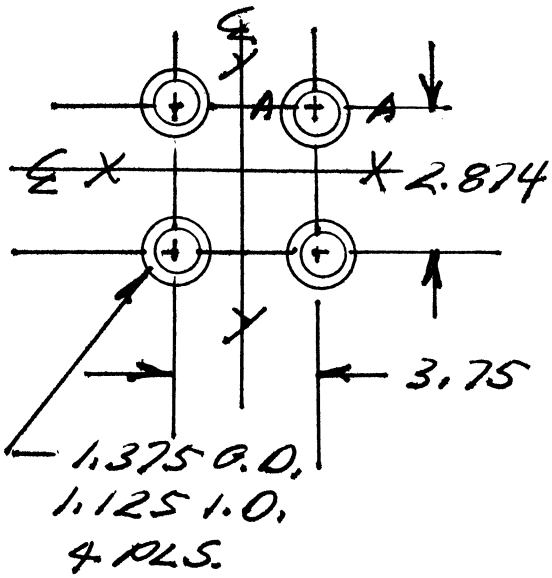

$$I_{A-A} = \frac{\pi\left[(1.375)^4-(1.125)^4\right]}{64} = .097$$

$$AREA = \frac{\pi\left[(1.375)^2-(1.125)^2\right]}{4} = .491$$

$$I_{XX} = \left[.097+(1.437)^2(.491)\right]4 = 4.444$$

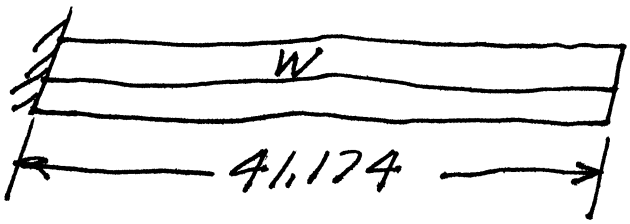

$$W = 2.375 \times 6 \times 41.174 \times .05 \times .5 + (.282)\frac{41.174}{12} \times 4$$

$$W = 15.636$$

$$y = -\frac{1}{8}\frac{W\ell^3}{EIK} = \frac{1}{8}\frac{(15.636)(41.174)^3}{(10\times10^6)(4.444)K}$$

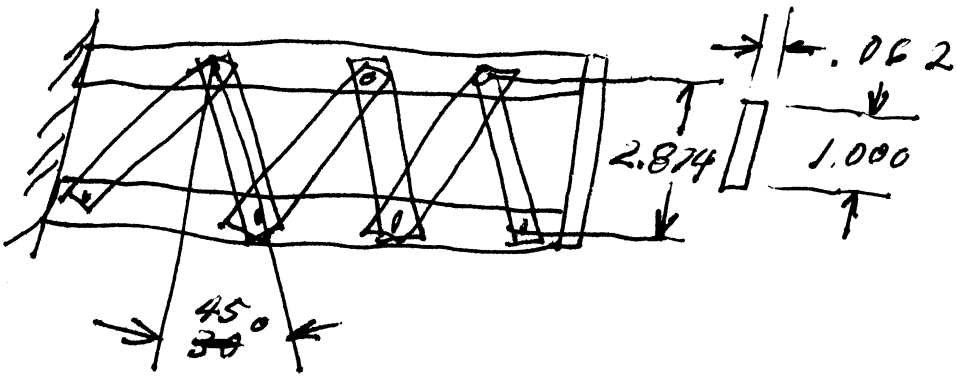

$$K = \frac{1}{1+\dfrac{4.93I}{AL^2\cos^2 \underset{45}{\cancel{30}}^\circ(\sin \underset{45}{\cancel{30}}^\circ)}} =$$

$$= \frac{1}{1+\dfrac{(4.93)(4.444)}{.062(41.174)^2(.707)^2(.7007)}} = .629$$

$$y = \frac{1}{8}\,\frac{(15.636)(41.174)^3}{(10\times10^6)(4.444)(.629)} = .005$$

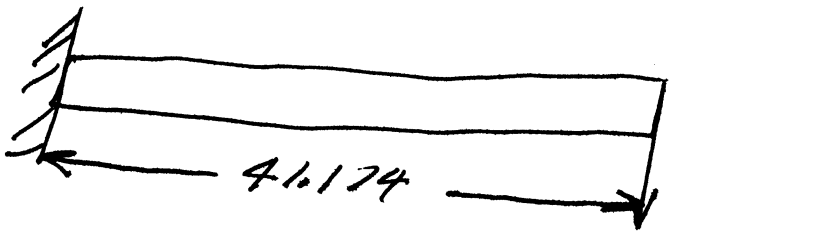

$$y = -\frac{1}{3}\,\frac{W\ell^3}{EIK}$$

$$y = \frac{1}{3}\,\frac{1.34(41.174)^3}{10\times10^6\times4.441(.629)} = .001$$

$y_{TOTAL} = .006$ INCHES

EXTENDED SNOUT DEFLECTION