Agenda for the HENEX 65% Design Review

NIF
The National Ignition Facility
NRL

1. Opening (Tina Back, tinaback@llnl.gov)
2. Design Overview (John Seely, john.seely@nrl.navy.mil)
3. Mechanical Design (Layne Marlin, lmarlin@ssd5.nrl.navy.mil)
4. Optical Design (Larry Hudson, larry.hudson@nist.gov)
5. Electronic Design (Rob Atkin,ratkin@tigerinnovations.com)
6. Interface/Sensor (Glenn Holland, gholland@ssd5.nrl.navy.mil)
7. Project Schedule (Perry Bell, e061547@popeye.llnl.gov)

Questions/comments: Please refer to presentation number 5.

HENEX electronics system overview

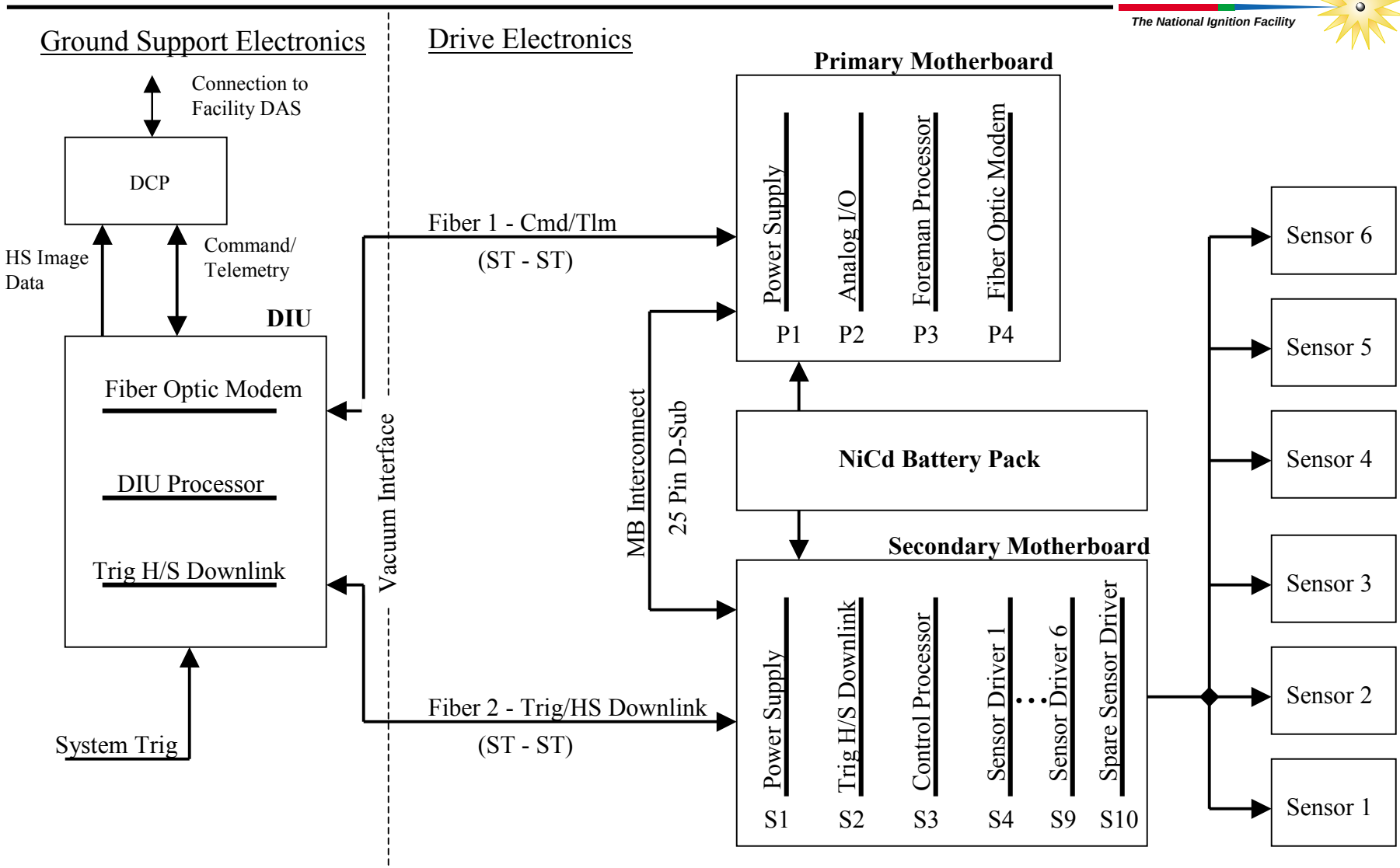

Detailed HENEX electronics design

NIF
The National Ignition Facility
NRL

Available by contacting Rob Atkin at ratkin@tigerinnovations.com